PCIe x16 Gen 3 Switch-based Cable Adapter

PCIe x16 Gen 3 switch-based cable adapter with an NT port and a DMA controller. The cable adapter operates in I/O expansion or networking mode with a DIP switch setting change.

PN: OSS-PCIe-HIB38-x16

Features

- Operates at up to 128Gb/s at PCIe Gen 3 speeds
- Requires no additional software
- Half-card form factor
- Switch-based board can operate in host or target mode

Specifications

Specifications subject to change without notice
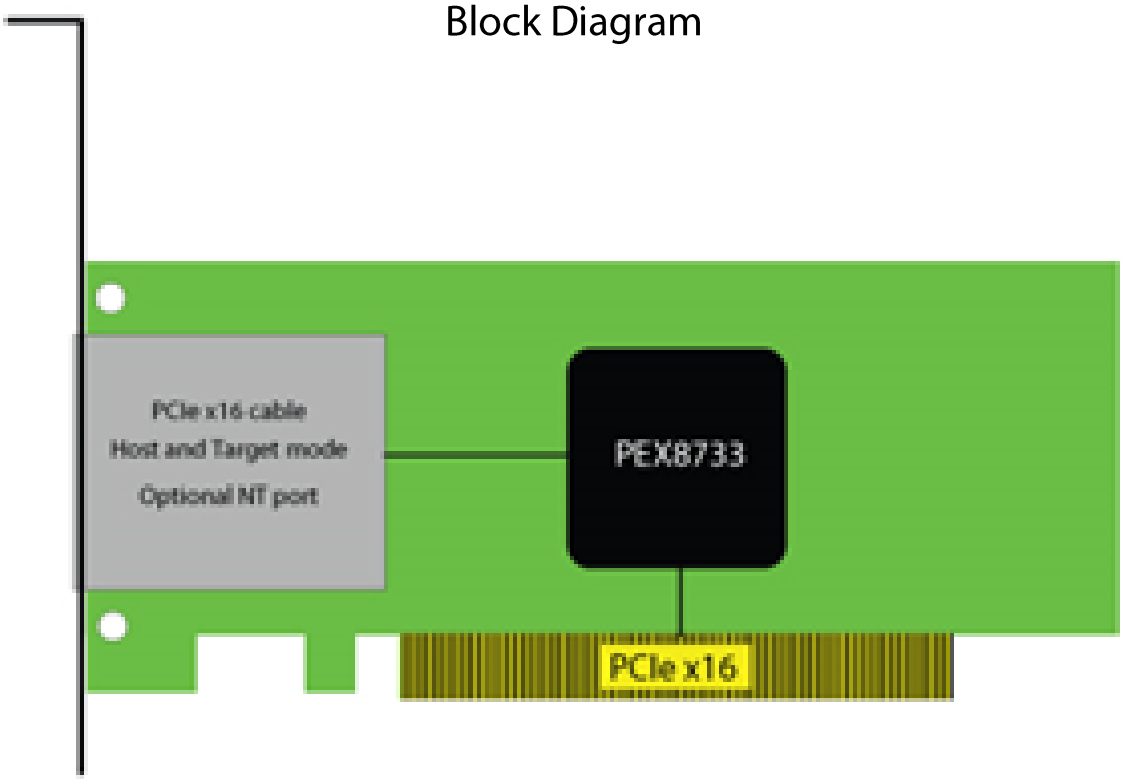
Block Diagram